beaulieu

TRANSITION**INSTALLATION**

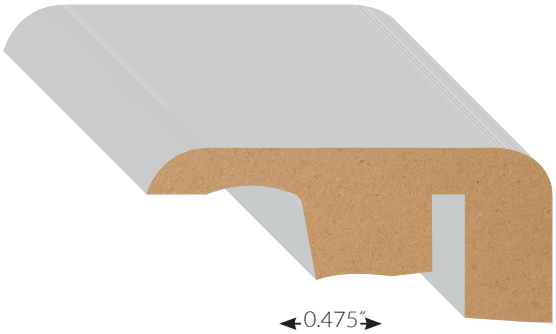

LAMINATE **SQUARE NOSE**

Used to fill the gap between the floor and carpet, hearts or against sliding doors.

1

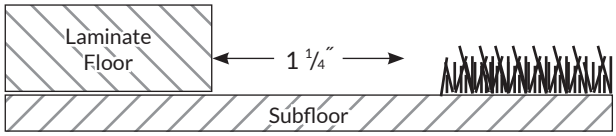

Install the flooring leaving a 1-1/4" gap between the two floors for the end cap installation.

2

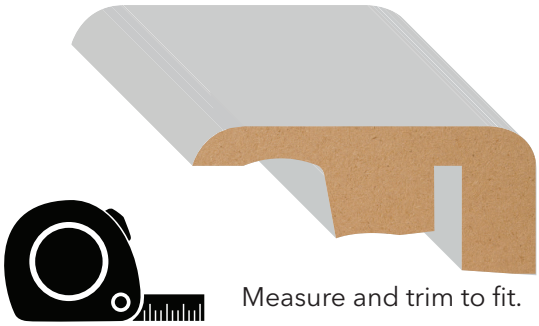

Measure and trim to fit.

3

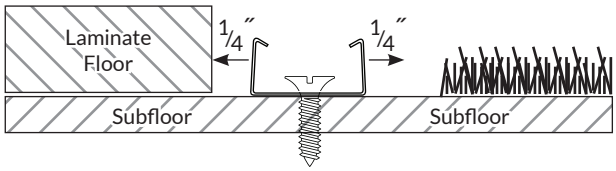

Center the track between the flooring with 1/4" spacing between the track and floor plank and screw to the subfloor using included screws.

4

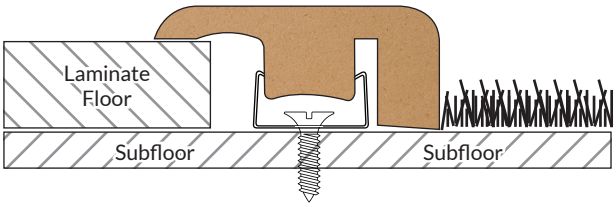

Starting at one end, press the molding into the track inching along the length of the molding. *It will NOT snap in all at once.* You may also use a rubber mallet.